IS32LT3154B

FOUR-CHANNEL LINEAR LED DRIVER WITH INDIVIDUAL PWM DIMMING AND THERMAL SHUNT

February 2026

GENERAL DESCRIPTION

The IS32LT3154B device is a linear programmable LED regulator consisting of four output channels capable of sourcing up to 150mA per channel. External power resistors can be used to shunt thermal heat and reduce the thermal stress on the driver. Independent resistor sets the maximum current level for each channel. The outputs can be combined to provide a higher current drive capability up to maximum 600mA. It supports individual PWM dimming control to each channel.

For added system reliability, IS32LT3154B integrates fault detection circuitry for LED string open/short circuit, and over temperature thermal conditions. The FAULTB is a bi-directional open drain pin for reporting the occurrence of a device fault and receiving system fault signal inputs. The system FAULTB pins can all be tied together to disable the IS32LT3154B device and other IS32LT3154B devices on the same parallel circuit to satisfy the “one-fail-all-fail” requirement.

The IS32LT3154B is targeted at the automotive market with end applications to include interior and exterior lighting. For 12V automotive applications, the low dropout driver can support one to several LEDs on the output channels. The device is offered in a small thermally enhanced eTSSOP-20 package.

APPLICATIONS

- Rear light
- Stop or taillight
- Position light
- Daytime running light
- Turn Signal Light
- Interior lighting

FEATURES

- Wide input voltage range: 4.5V~40V
- Support thermal shunt resistors to lower device thermal stress
- Four current source channels with programmable constant current
  - Up to 150mA output current per channel
  - ±4% current accuracy over the operating temperature range
  - Independent current set resistor
- Low headroom voltage
  - Max. dropout: 0.6V at 150mA per channel
- Independent logic level PWM dimming per channel
- Support ultra-low current shutdown mode (Typ. 17μA)
- Low supply current (Typ. 100μA) in fault mode
- Fault detection and protection
  - LED string open/short
  - External UVLO setting
  - Thermal shutdown
  - Shared fault flag for multiple device operation to comply with “one-fail-all-fail” function
- Operating junction temperature range -40°C to 150°C
- AEC-Q100 Qualified with Temperature Grade 1: -40°C to 125°C
- RoHS & Halogen-Free Compliance
- TSCA Compliance

TYPICAL APPLICATION CIRCUIT

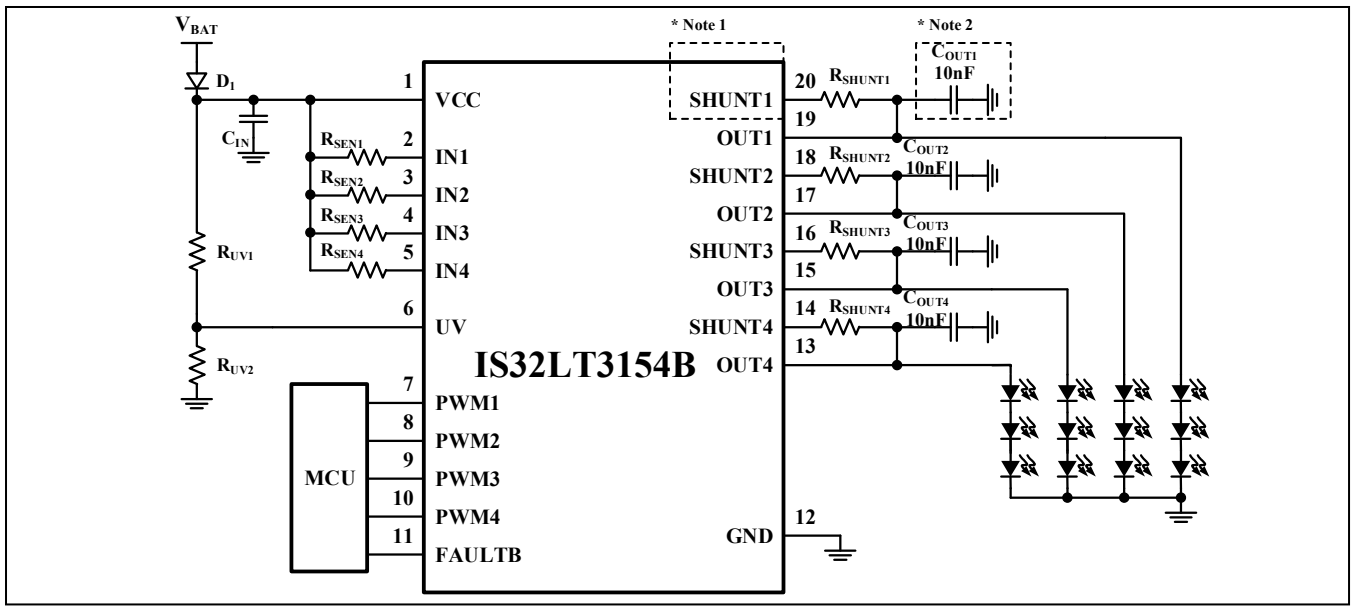

Figure 1 Typical Application Circuit

Note 1: The thermal shunt mechanism (R_{SHUNT1}~R_{SHUNT4}) is optional and not necessary for stable power supplies exhibiting minimal voltage variation. If not used, connect the SHUNTx pin to the corresponding OUTx pin directly. The SHUNTx pin should not be left floating.

Note 2: OUTx pin needs to be connected to a 10nF capacitor, placing it as close as possible to the IC to achieve noise decoupling.

Note 3: If any output channel is unused, tie its corresponding PWM pin to ground to disable it, and directly connect the corresponding INx/OUTx/SHUNTx pins to the VCC pin.

PIN CONFIGURATION

Package	Pin Configuration (Top View)
eTSSOP-20	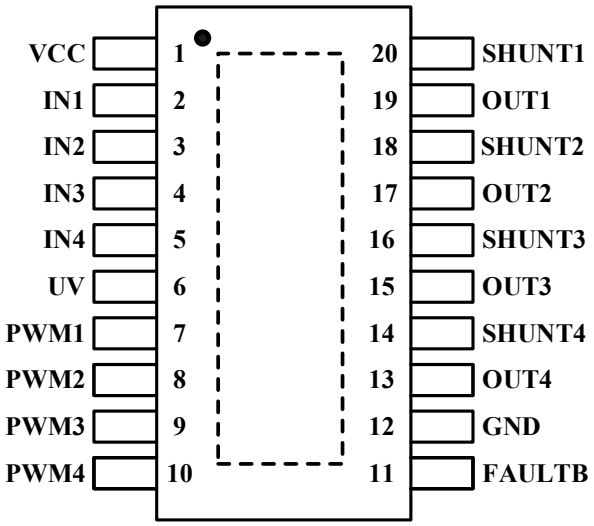

PIN DESCRIPTION

No.	Pin	Description
1	VCC	Power supply pin.
2~5	IN1~IN4	Current input pin for channel 1 ~ channel 4
6	UV	Under voltage lockout threshold setting pin for LED string open fault detection to avoid false LED string open detection during low voltage dropout operation. Pulling it low will disable the LED string open fault detection.
7~10	PWM1~PWM4	PWM input for OUTx and SHUNTx current output ON/OFF control. Pulling all PWM1~PWM4 pins low for >t_{SD} will force the device into shutdown mode.
11	FAULTB	Fault reporting pin. Supports one-fails–all-fail fault parallel bus connection.
12	GND	Ground pin.
13,15,17,19	OUT4~OUT1	Current output for channels 4 ~ 1. A 10nF capacitor is recommended from each pin to GND. These capacitors need to be placed as close as possible to the corresponding OUTx pins.
14,16,18,20	SHUNT4 ~SHUNT1	Current output for channels 4 ~ 1 with external thermal shunt resistors. Do not leave them floating.
	Thermal Pad	Must be connected to GND with sufficient copper plate for heat sink.

ORDERING INFORMATION
Automotive Range: -40°C to +125°C

Order Part No.	Package	QTY/Reel
IS32LT3154B-ZLCA3-TR	eTSSOP-20, Lead-free	2500

Copyright © 2026 Lumissil Microsystems. All rights reserved. Lumissil Microsystems reserves the right to make changes to this specification and its products at any time without notice. Lumissil Microsystems assumes no liability arising out of the application or use of any information, products or services described herein. Customers are advised to obtain the latest version of this device specification before relying on any published information and before placing orders for products.
Lumissil Microsystems does not recommend the use of any of its products in life support applications where the failure or malfunction of the product can reasonably be expected to cause failure of the life support system or to significantly affect its safety or effectiveness. Products are not authorized for use in such applications unless Lumissil Microsystems receives written assurance to its satisfaction, that:
a.) the risk of injury or damage has been minimized;
b.) the user assume all such risks; and
c.) potential liability of Lumissil Microsystems is adequately protected under the circumstances

ABSOLUTE MAXIMUM RATINGS (NOTE 4)

Voltage at VCC pin	-0.3V ~ +45V
Voltage at UV, IN1~IN4, PWM1~PWM4, FAULTB, OUT1~OUT4 and SHUNT1~SHUNT4 pins	-0.3V ~ V_{CC}+0.3V
Operating temperature, T_A=T_J	-40°C ~ +150°C
Storage temperature, T_{STG}	-65°C ~ +150°C
Junction temperature, T_{JMAX}	+150°C
Power dissipation, $P_{D(MAX)}$	3.88W
Package thermal resistance, junction to ambient (4-layer standard test PCB based on JESD 51-2A), θ_{JA}	32.2°C/W
Package thermal resistance, junction to case (bottom) (4-layer standard test PCB based on JESD 51-14), θ_{JC_BOT}	9.0°C/W
ESD (HBM) ESD (CDM)	±2kV ±750V

Note 4: Stresses beyond those listed under "Absolute Maximum Ratings" may cause permanent damage to the device. These are stress ratings only and functional operation of the device at these or any other condition beyond those indicated in the operational sections of the specifications is not implied. Exposure to absolute maximum rating conditions for extended periods may affect device reliability.

ELECTRICAL CHARACTERISTICS

Valid are at V_{CC}= 5V~40V, T_J= -40°C to +150°C, unless noted otherwise. Refer to each condition description.

Symbol	Parameter	Conditions	Min.	Typ.	Max.	Unit
Input Supply						
V_{CC}	Operating input voltage range		4.5		40	V
V_{POR_R}	Supply voltage POR rising threshold	Voltage rising		3.5	4.4	V
V_{POR_F}	Supply voltage POR falling threshold	Voltage falling	2.5	3.3		V
I_{CC}	Quiescent current	PWMx=High		2.2	3.0	mA
I_{SD}	Shutdown current	PWMx=Low longer than t_{SD}		17	50	μA
I_{FAULT}	Supply current in fault mode	PWMx=High, FAULTB externally pulled low		100	200	μA
t_{ST}	Startup time from V_{CC} rising edge to current rising edge after first power-up	V_{CC}=12V, V_{OUTx}=6V, V_{SEN}=150mV, R_{SENx}=1Ω, R_{SHUNTx}=56Ω		50	100	μs
Current Regulation						
I_{OUT_R}	Output current range per channel	I_{OUTx} + I_{SHUNTx}, 100% duty cycle	-150		-5	mA
R_{SEN_RG}	Current sense resistor range		0.96		31.2	Ω
V_{SEN}	Current sense resistor regulation voltage (voltage across V_{CC} and INx)	T_J= -40°C to +125°C	144	150	156	mV
ΔV_{SEN_MA}	Channel to channel mismatching in one device	ΔV_{SEN_MA}=1-V_{SENx}/V_{SEN_AVG}	-3		3	%
ΔV_{SEN_AC}	Device to device accuracy	ΔV_{SEN_AC}=1-V_{SEN_AVG}/V_{SEN_NOM}	-4		4	%

ELECTRICAL CHARACTERISTICS (CONTINUE)

Valid are at V_{CC}= 5V~40V, T_J= -40°C to +150°C, unless noted otherwise. Refer to each condition description.

Symbol	Parameter	Conditions	Min.	Typ.	Max.	Unit
V_{HR_MIN}	Minimum headroom voltage from INx to OUTx, SHUNTx open	Current setting of 100mA		200	400	mV
		Current setting of 150mA		300	600	
	Minimum headroom voltage from INx to SHUNTx, OUTx open	Current setting of 100mA		330	600	mV
		Current setting of 150mA		460	800	
I_{SHUNTx}	Ratio of SHUNTx current to total current (I_{OUTx} + I_{SHUNTx})	I_{SHUNTx}/I_{OUTx_TOT}, V_{Inx}-V_{SHUNTx}>1V, T_J= 25°C to +125°C	95			%
Inputs (UV and PWM)						
V_{IL_UV}	UV pin input logic low voltage		1.045	1.1	1.155	V
V_{IH_UV}	UV pin input logic high voltage		1.14	1.2	1.26	V
V_{IL_PWM}	PWM pin input logic low voltage		1.045	1.1	1.155	V
V_{IH_PWM}	PWM pin input logic high voltage		1.14	1.2	1.26	V
t_{SD}	Duration time all PWM pins kept low to shut down the device			50	70	ms
t_{PWM_RD}	Delay time of PWM rising edge to 10% output current	V_{CC}=12V, V_{OUTx}=6V, V_{SEN}=150mV, R_{SENx}=1Ω, R_{SHUNTx}=56Ω		4		µs
		V_{CC}=12V, V_{OUTx}=6V, V_{SEN}=150mV, R_{SENx}=30Ω, R_{SHUNTx}=56Ω		4		µs
t_{PWM_FD}	Delay time of PWM falling edge to 90% output current	V_{CC}=12V, V_{OUTx}=6V, V_{SEN}=150mV, R_{SENx}=1Ω, R_{SHUNTx}=56Ω		4		µs
		V_{CC}=12V, V_{OUTx}=6V, V_{SEN}=150mV, R_{SENx}=30Ω, R_{SHUNTx}=56Ω		4		µs
t_{SL_R}	Current rising slew time (rising from 10% to 90% levels)	V_{CC}=12V, V_{OUTx}=6V, V_{SEN}=150mV, R_{SENx}=1Ω, R_{SHUNTx}=56Ω		11		µs
		V_{CC}=12V, V_{OUTx}=6V, V_{SEN}=150mV, R_{SENx}=30Ω, R_{SHUNTx}=56Ω		2		µs
t_{SL_F}	Current falling slew time (falling from 90% to 10% levels)	V_{CC}=12V, V_{OUTx}=6V, V_{SEN}=150mV, R_{SENx}=1Ω, R_{SHUNTx}=56Ω		9		µs
		V_{CC}=12V, V_{OUTx}=6V, V_{SEN}=150mV, R_{SENx}=30Ω, R_{SHUNTx}=56Ω		2		µs

ELECTRICAL CHARACTERISTICS (CONTINUE)

Valid are at V_{CC}= 5V~40V, T_J= -40°C to +150°C, unless noted otherwise. Refer to each condition description.

Symbol	Parameter	Conditions	Min.	Typ.	Max.	Unit
Protections						
V_{OCD_R}	LED string open detection rising threshold	Measured at (V_{INx}-V_{OUTx}), V_{CC}= 5V~30V	180	300	480	mV
V_{OCD_F}	LED string open detection falling threshold	Measured at (V_{INx}-V_{OUTx}), V_{CC}= 5V~30V		450		mV
V_{SCD_R}	LED string short detection rising threshold	Measured at OUTx/SHUNTx to GND	1.14	1.2	1.26	V
V_{SCD_F}	LED string short detection falling threshold	Measured at OUTx/SHUNTx to GND	0.83	0.9	0.97	V
t_{OS_DEG}	LED string open and short detection deglitch time			125		µs
t_{OSRC_DEG}	LED string open and short fault recovery detection deglitch time			125		µs
I_{RTR_OUT}	OUTx short to ground retry current		0.64	1.08	1.8	mA
I_{RTR_SHUNT}	SHUNTx short to ground retry current		0.64	1.08	1.8	mA
V_{IL_FLT}	FAULTB pin input logic low voltage				0.7	V
V_{IH_FLT}	FAULTB pin input logic high voltage		2			V
V_{FLT_PU}	FAULTB pin internal pull-up voltage			4.3		V
t_{FLT_R}	FAULTB pin detection rising edge deglitch time			65		µs
t_{FLT_F}	FAULTB pin detection falling edge deglitch time			55		µs
t_{FLT_DEL}	Fault recover delay time			60		µs
I_{FLT_PD}	FAULTB pin internal pull-down current	V_{FAULTB}= 0.5V	2	3	4	mA
I_{FLT_PU}	FAULTB pin internal pull-up current		6	11	18	µA
I_{FLT_LKG}	FAULTB pin leakage current	V_{FAULTB}=40V		1	2	µA
I_{OUT_LKG}	Channel leakage current on OUTx pin	PWMx= Low, V_{OUTx}= 0V			1	µA
I_{SHUNT_LKG}	Channel leakage current on SHUNTx pin	PWMx= Low, V_{SHUNTx}= 0V			1	µA
T_{SD}	Over temperature shutdown	Temperature increasing (Note 5)		175		°C
T_{SDHY}	Over temperature hysteresis	Recovery= T_{SD} -T_{SDHY} (Note 5)		20		°C

Note 5: Guaranteed by design and characterization.

TYPICAL PERFORMANCE CHARACTERISTICS

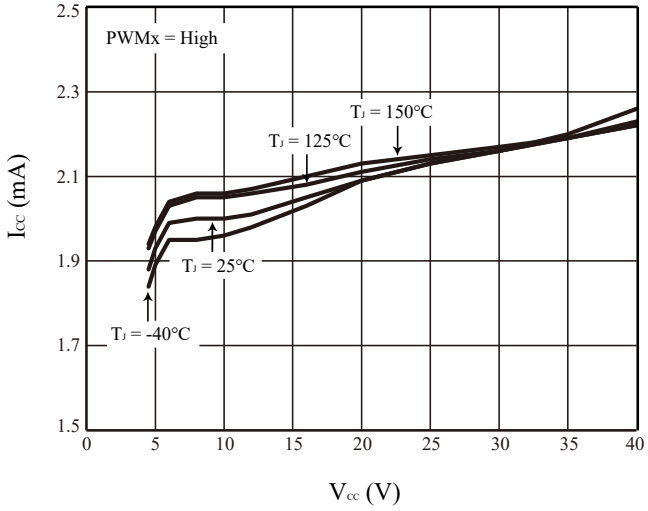

Figure 2 I_{CC} vs. V_{CC}

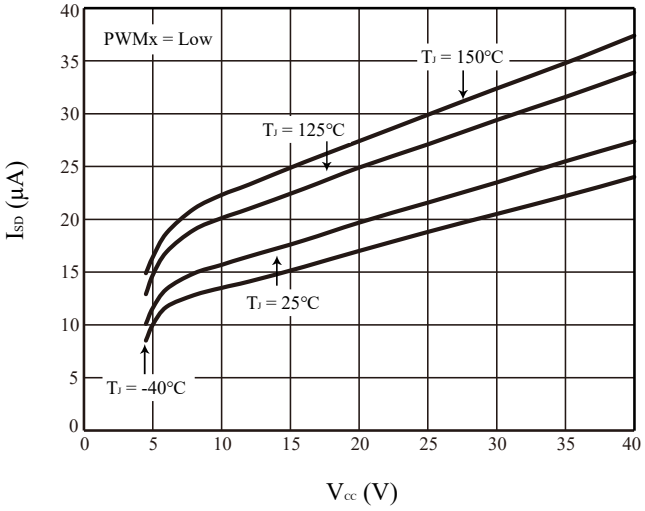

Figure 3 I_{SD} vs. V_{CC}

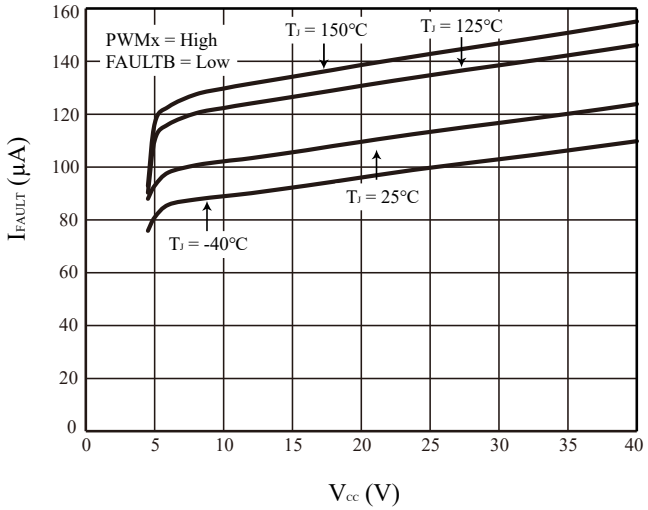

Figure 4 I_{FAULT} vs. V_{CC}

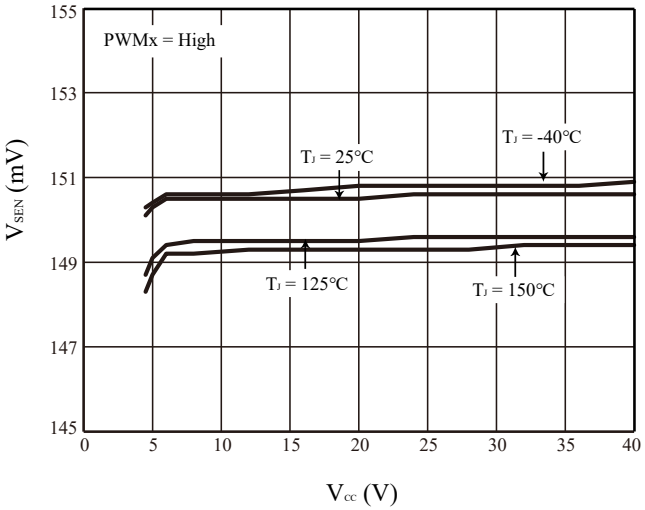

Figure 5 V_{SEN} vs. V_{CC}

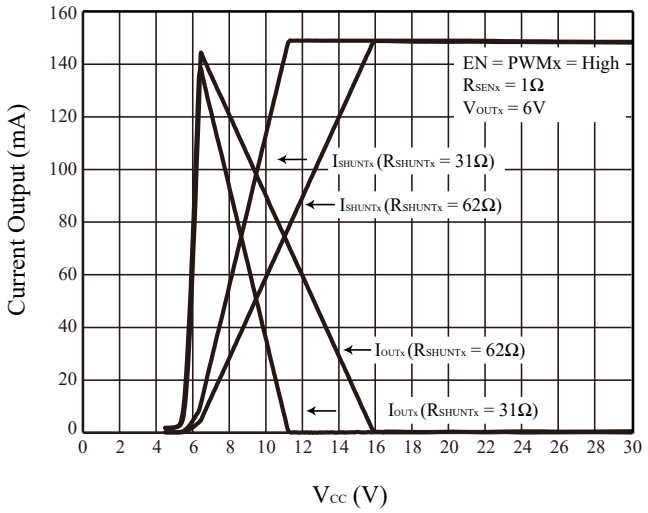

Figure 6 Output Current Distribution vs. V_{CC}

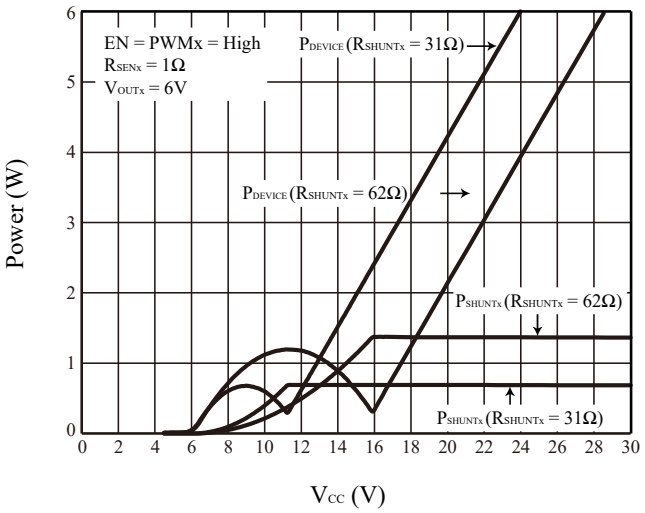

Figure 7 Power Dissipation vs. V_{CC}

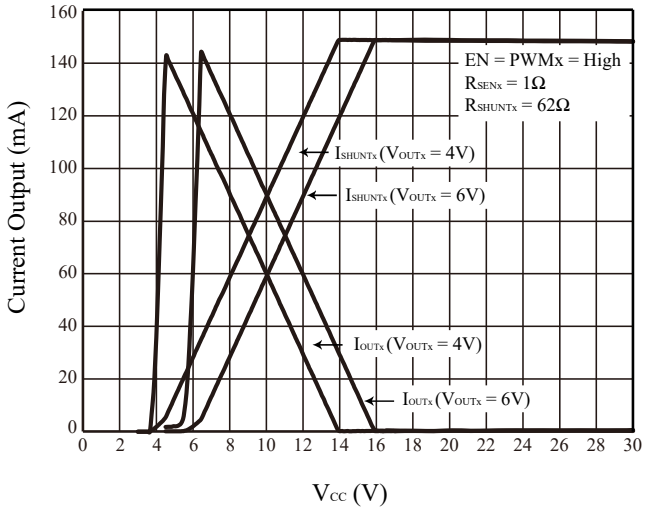

Figure 8 Output Current Distribution vs. V_{CC}

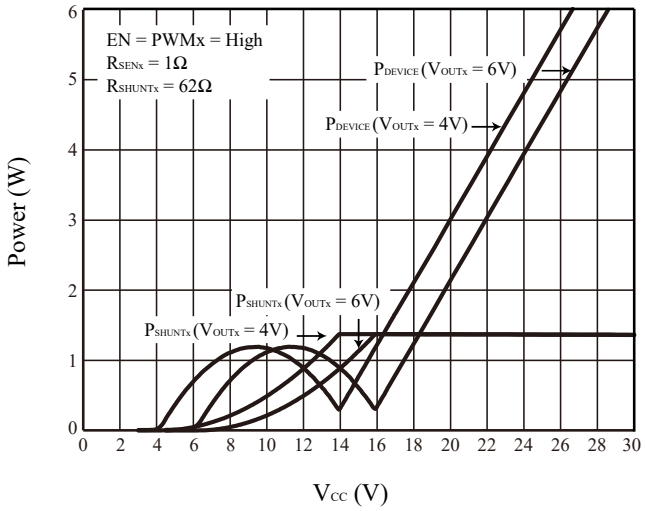

Figure 9 Power Dissipation vs. V_{CC}

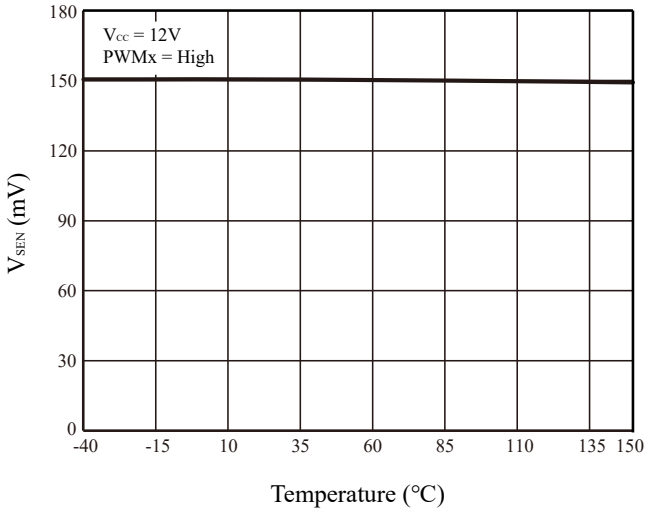

Figure 10 V_{SEN} vs. Temperature

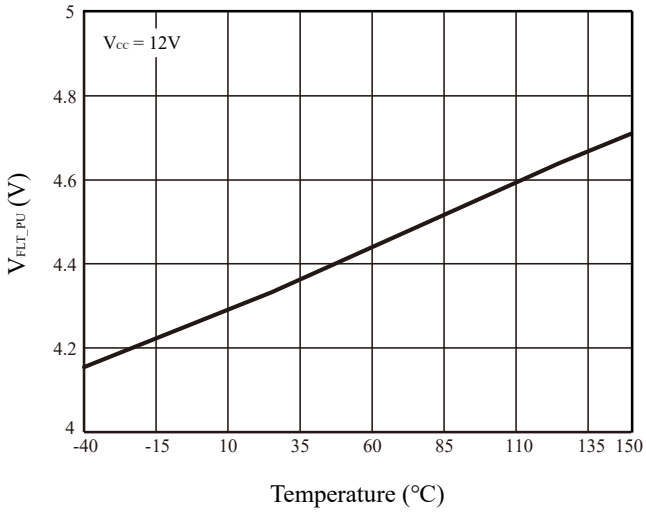

Figure 11 V_{FLT_PU} vs. Temperature

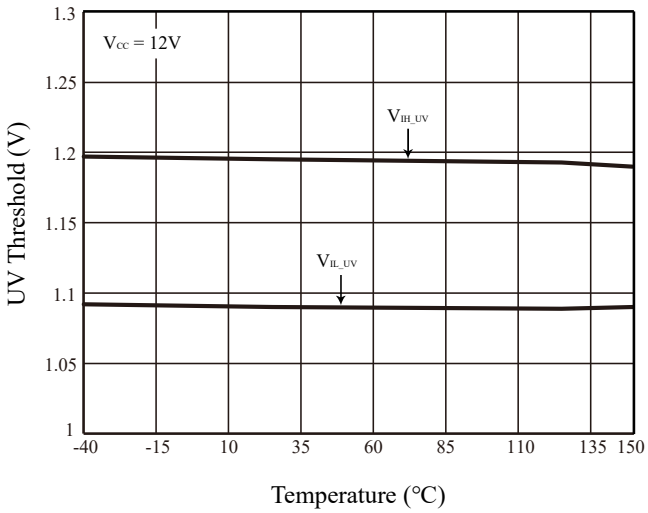

Figure 12 UV Threshold vs. Temperature

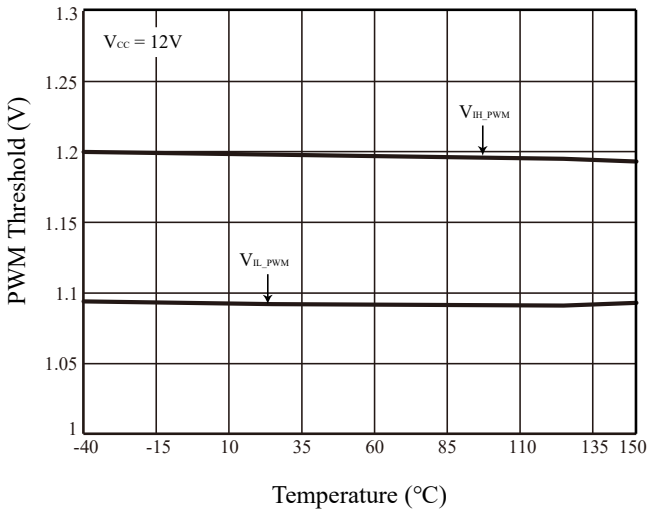

Figure 13 PWM Threshold vs. Temperature

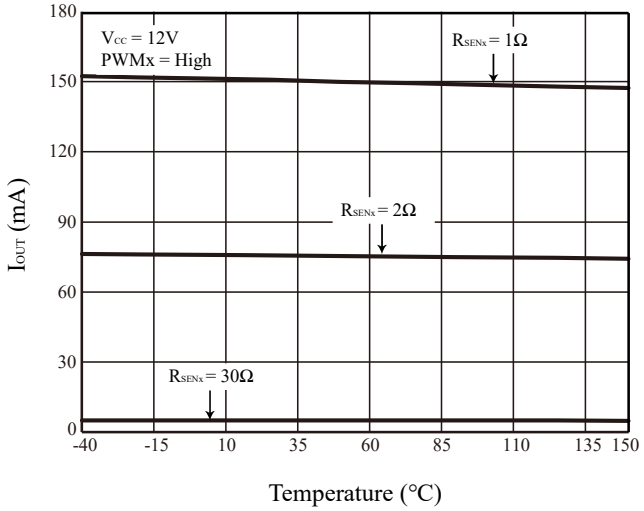

Figure 14 I_{OUT} vs. Temperature

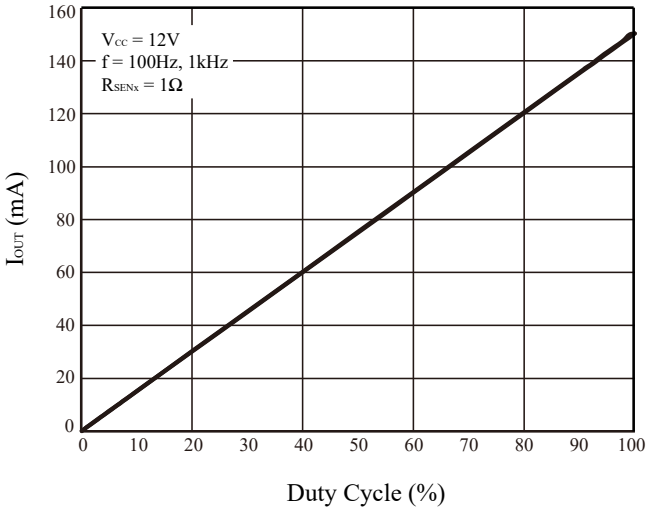

Figure 15 I_{OUT} vs. Duty Cycle

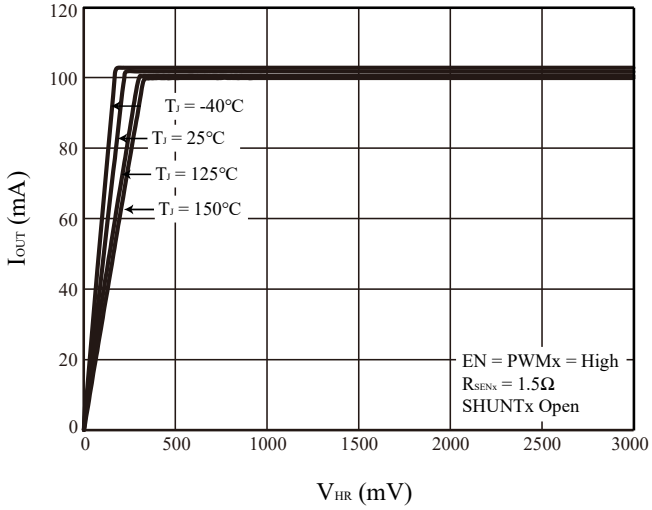

Figure 16 I_{OUT} vs. V_{HR}

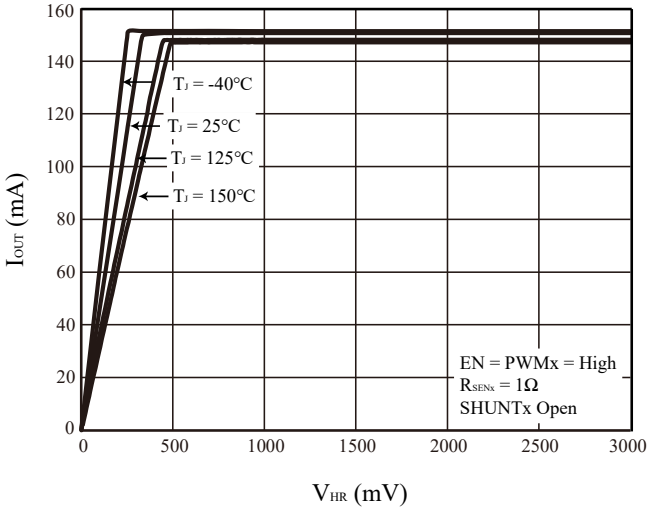

Figure 17 I_{OUT} vs. V_{HR}

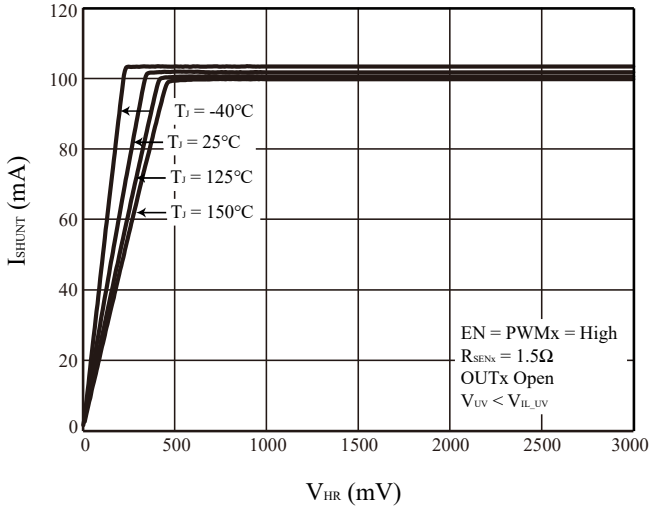

Figure 18 I_{SHUNT} vs. V_{HR}

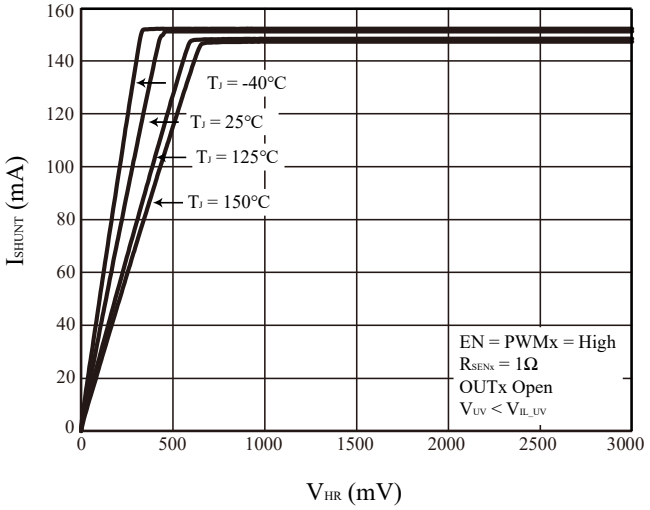

Figure 19 I_{SHUNT} vs. V_{HR}

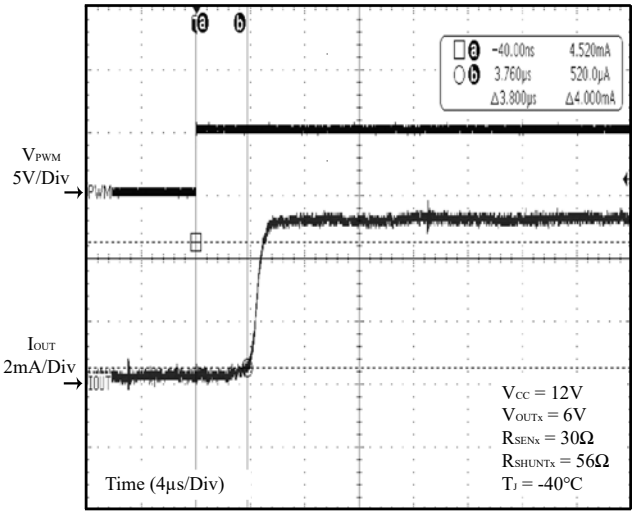

Figure 20 PWM On Delay Time

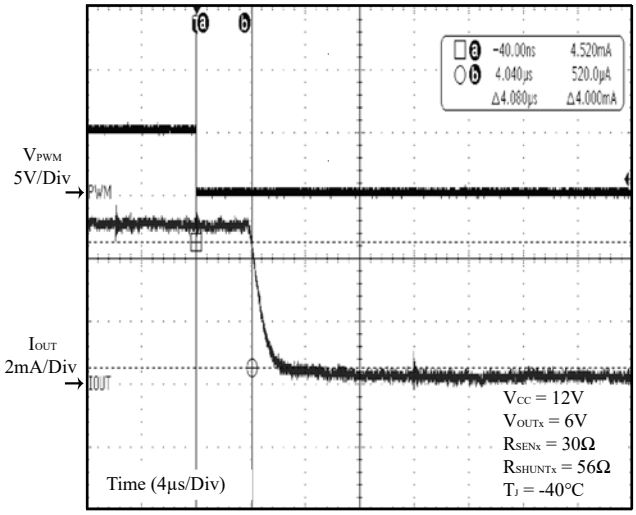

Figure 21 PWM Off Delay Time

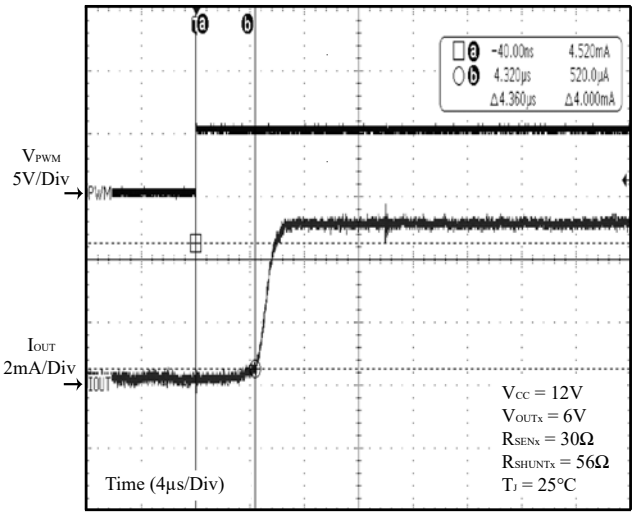

Figure 22 PWM On Delay Time

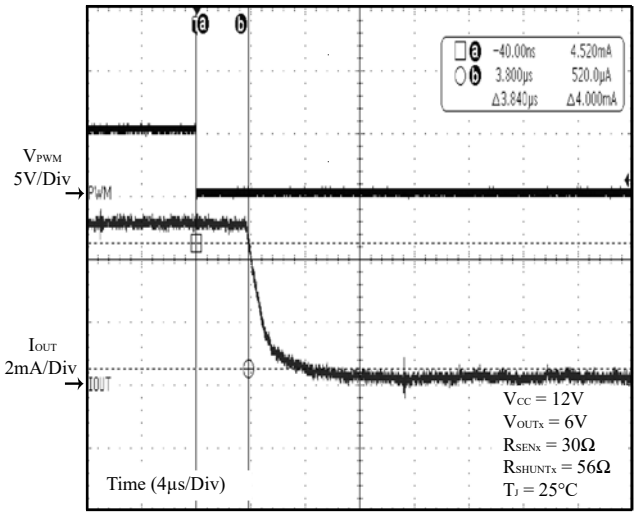

Figure 23 PWM Off Delay Time

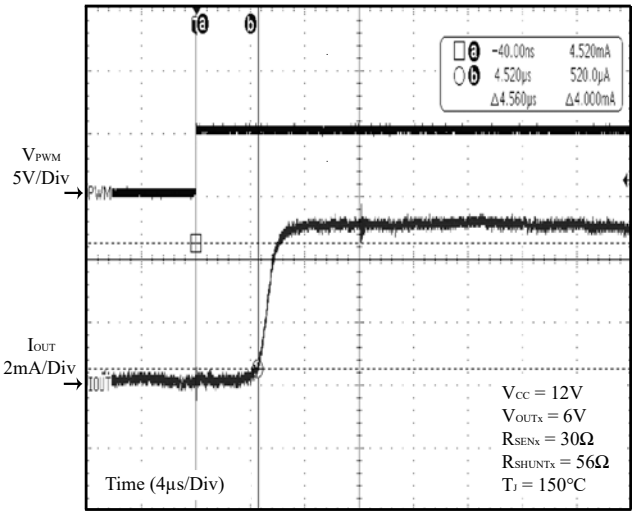

Figure 24 PWM On Delay Time

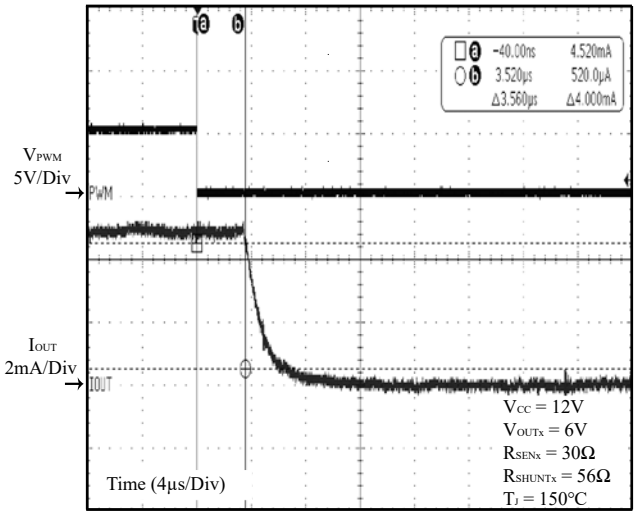

Figure 25 PWM Off Delay Time

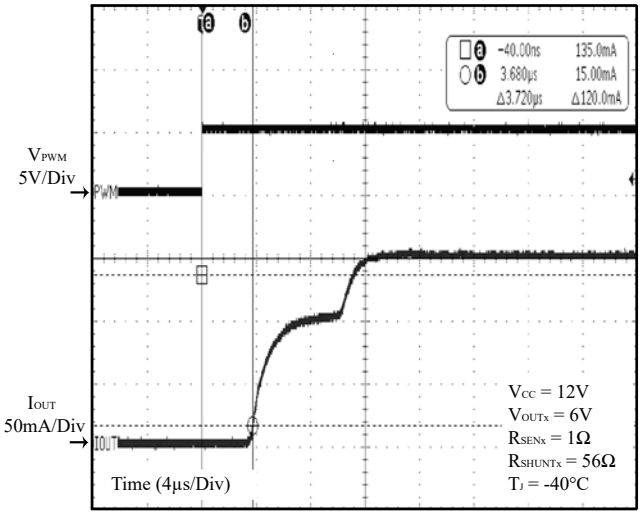

Figure 26 PWM On Delay Time

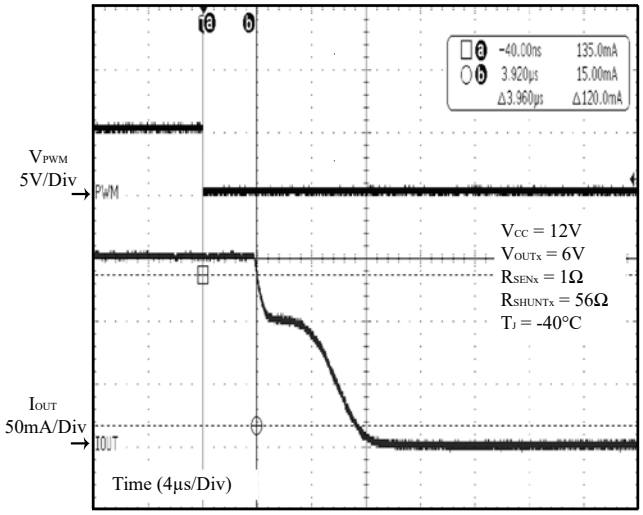

Figure 27 PWM Off Delay Time

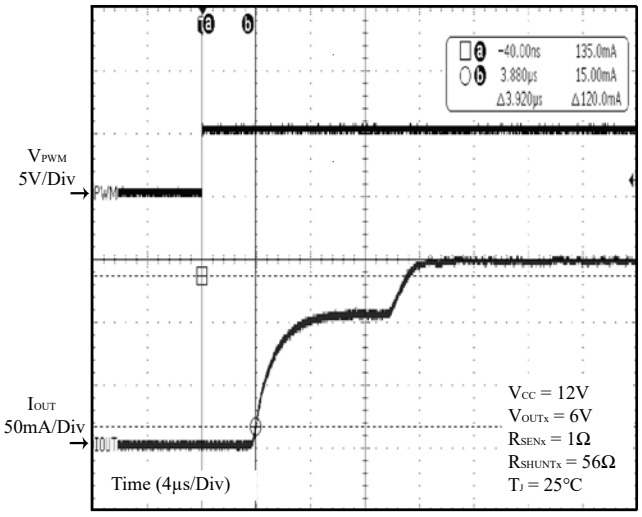

Figure 28 PWM On Delay Time

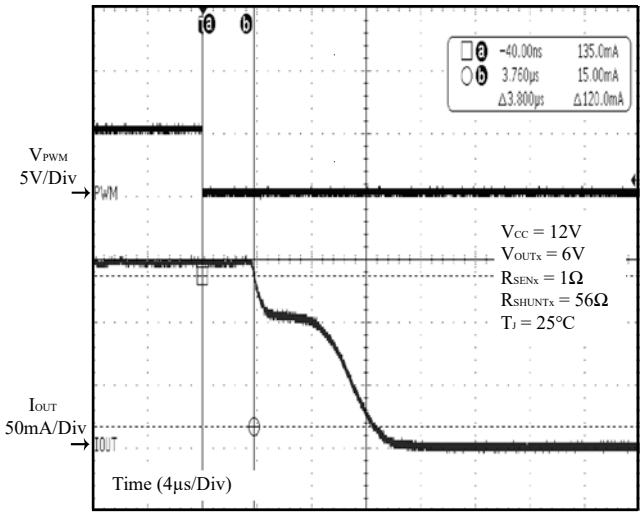

Figure 29 PWM Off Delay Time

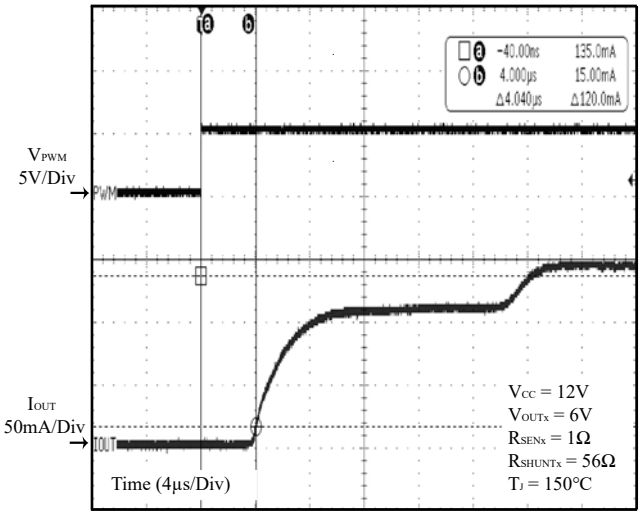

Figure 30 PWM On Delay Time

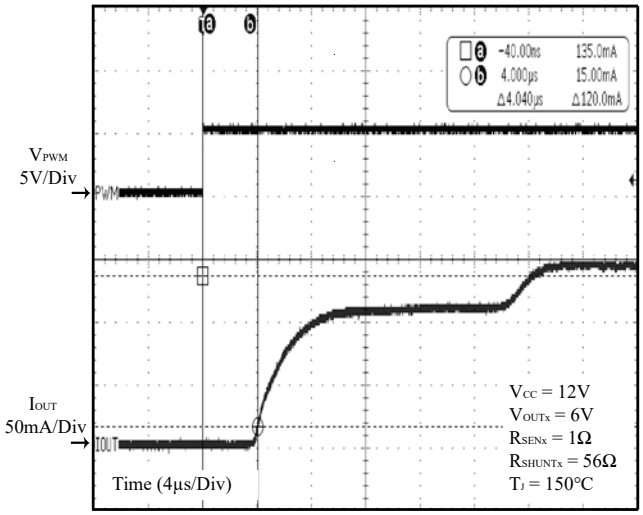

Figure 31 PWM Off Delay Time

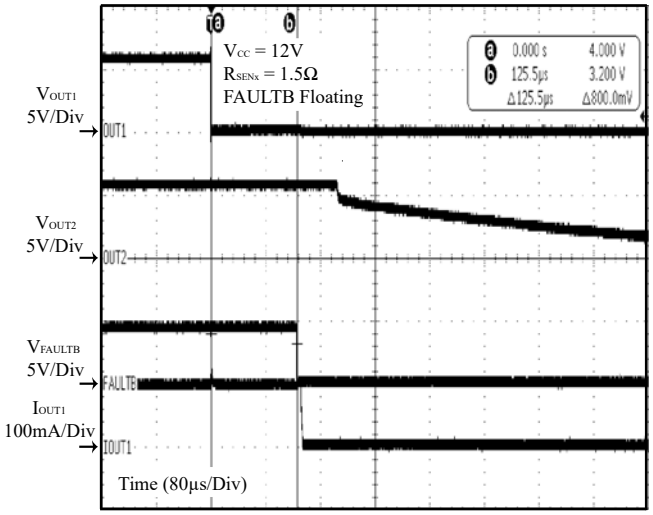

Figure 32 LED Short To GND

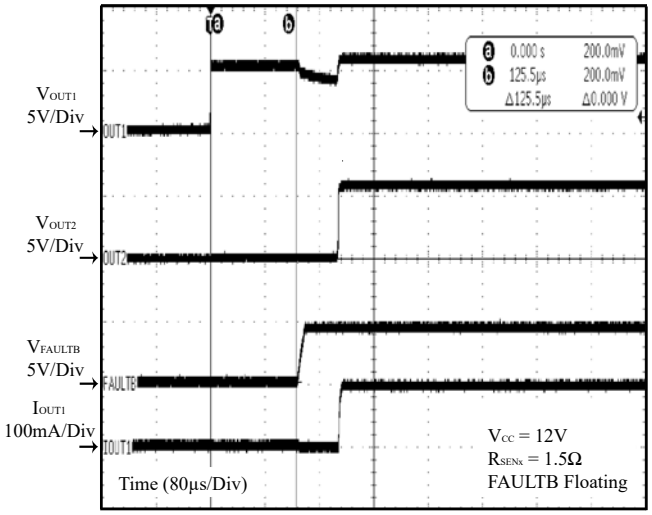

Figure 33 LED Short Remove

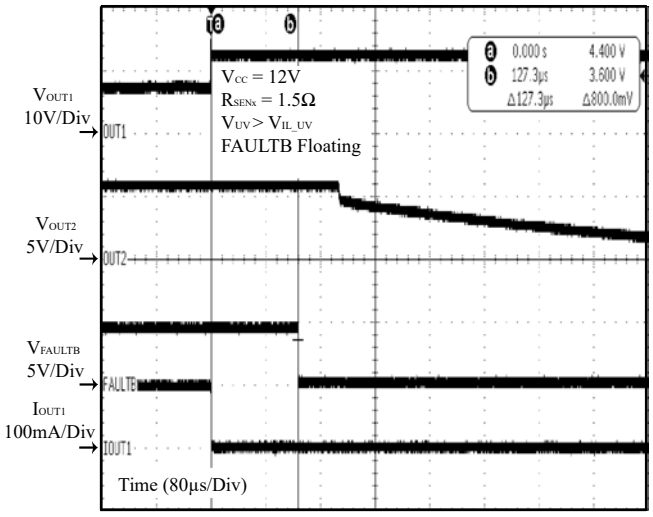

Figure 34 LED Open

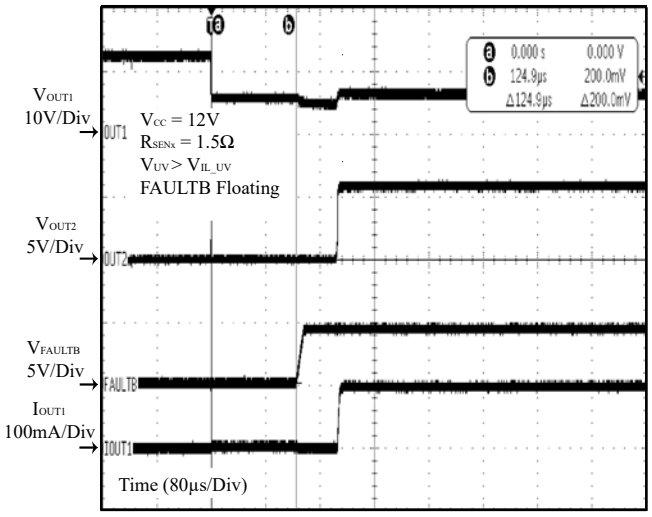

Figure 35 LED Open Remove

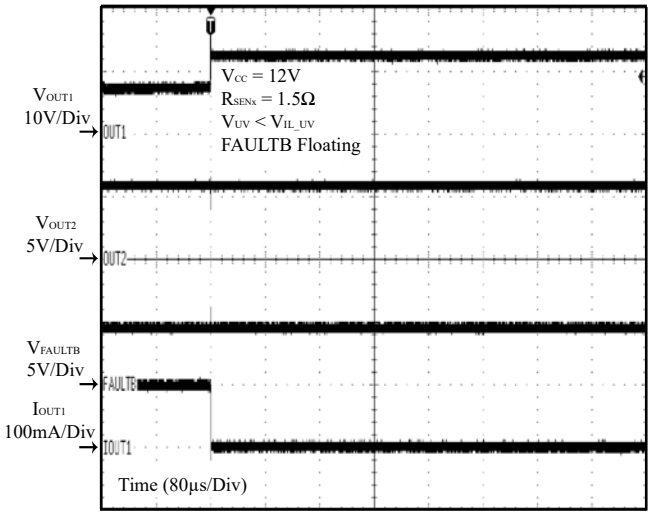

Figure 36 LED Open

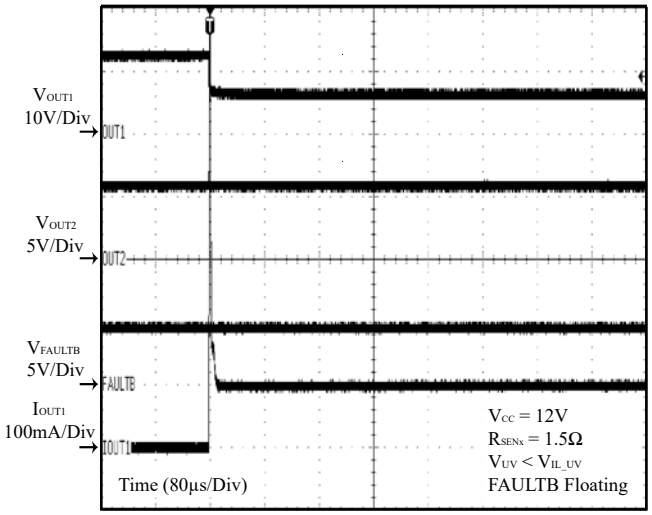

Figure 37 LED Open Remove

FUNCTIONAL BLOCK DIAGRAM

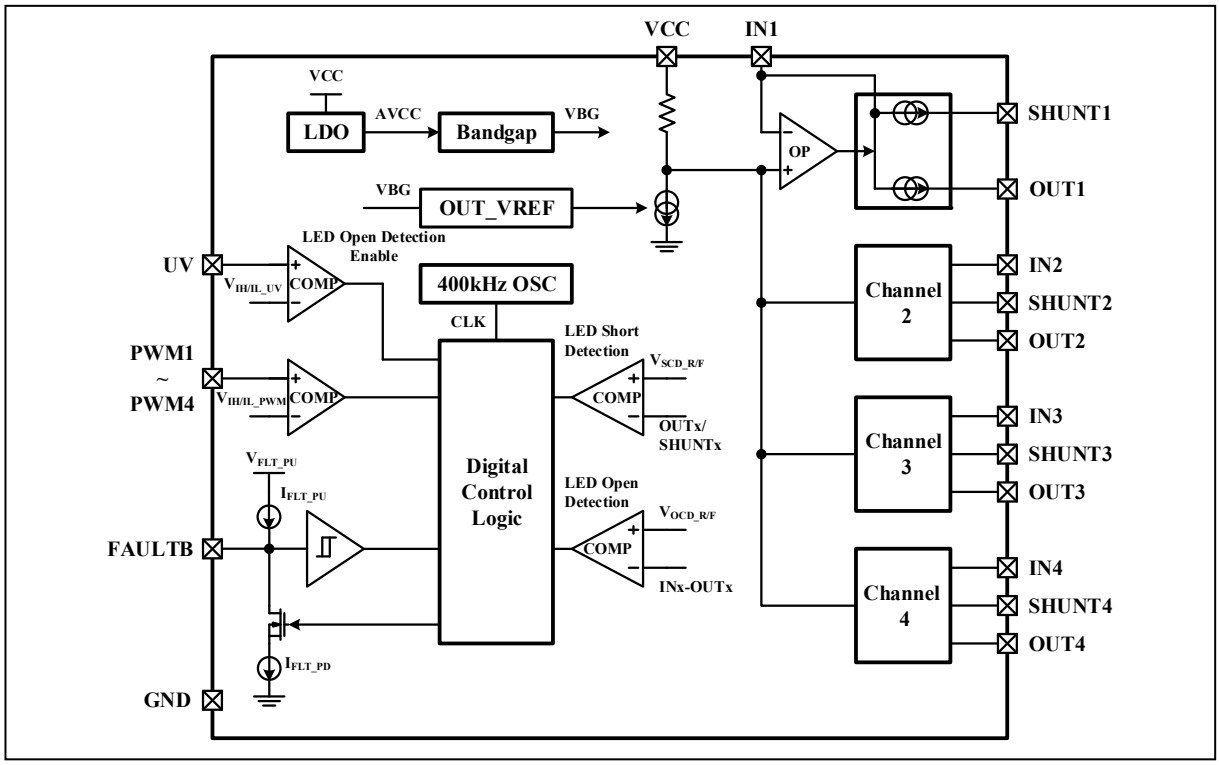

APPLICATION INFORMATION

The IS32LT3154B is a four-channel, high-side linear LED driver with individual PWM dimming. Each channel has up to 150mA current capability. The output current for each channel is independently adjustable using external R_{SENx} resistors on the INx pins. Current flows from the power supply through the R_{SENx} resistor into the INx pin, then through the integrated current regulator circuit to the LED string via the OUTx and SHUNTx pins. The device monitors the voltage drop across the R_{SENx} resistor to ensure a stable current output and an internal regulation loop adjusts the output current source to maintain a consistent V_{SEN} voltage drop across the R_{SENx} resistor. Additionally, the thermal shunt mechanism helps to efficiently manage thermal stress on the driver.

A high-side current source output architecture allows common-cathode LED strings to connect directly to ground, requiring only a single return wire. In contrast, a driver with a low-side current sink architecture would require two return wires for each LED string.

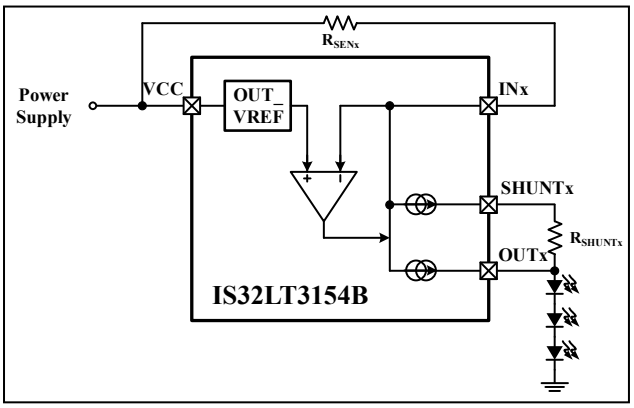

Figure 38 Constant Current Regulation

The IS32LT3154B supports both power supply modulation and PWM control for turning LEDs ON and OFF. The LED brightness can be adjusted by applying a variable-duty cycle to either the VCC or PWMx pins, with a frequency above 100Hz.

OUTPUT CURRENT SETTING

The current sense resistor R_{SENx} sets the regulated maximum LED current. R_{SEN1} sets the total current of OUT1 and SHUNT1, R_{SEN2} sets the total current of OUT2 and SHUNT2, R_{SEN3} sets the total current of OUT3 and SHUNT3, and R_{SEN4} sets the total current of OUT4 and SHUNT4. The value of R_{SENx} can be calculated using the following equation:

$$R_{SENx} = \frac{V_{SEN}}{I_{LEDx}} \qquad (1)$$

Where x = 1, 2, 3 or 4 for output channel 1, 2, 3 or 4, I_{LEDx} is the desired LED current in Amps and R_{SENx} is in ohms. V_{SEN} is the current sense regulation voltage, 150mV typical.

It is recommended to use a 1% resistor with good temperature characteristics for R_{SENx} to ensure stable and precise output current. For optimal PCB layout and minimize noise interference, place the R_{SENx} resistor as close as possible to the VCC and INx pins.

If the supply voltage drops below the sum of the total LED string forward voltage plus the required headroom voltage (sum of V_{HR_MIN} and V_{SEN}), the IS32LT3154B will be unable to deliver the current set by R_{SENx}, resulting in a voltage drop across R_{SENx} that is less than V_{SEN}.

Never leave the INx pins floating. If a channel is unused, its INx pin should be connected directly to the VCC pin.

PWM DIMMING

The IS32LT3154B features a dedicated PWM pin for each output channel to control the current source. The PWM1 input controls the output channel 1 (OUT1 and SHUNT1), PWM2 controls the output channel 2 (OUT2 and SHUNT2), PWM3 controls output channel 3 (OUT3 and SHUNT3), and PWM4 controls output channel 4 (OUT4 and SHUNT4). The voltage at each PWMx pin must be higher than V_{IH_PWM} to enable the corresponding output channel and lower than V_{IL_PWM} to disable it. An external PWM signal on the PWMx pins can modulate the output current to dim the LED light output. The PWM dimming output current is based on the PWM signal's duty cycle and can be calculated by the following equation:

$$I_{LEDx_PWM} = I_{LEDx} \times D_{PWM} \qquad (2)$$

Where D_{PWM} is the duty cycle of the PWM signal.

The recommended frequency range for the external PWM signal is 100Hz to 1kHz, and the duty cycle range can be from 0 to 100%. Lower frequency PWM signals provide better dimming linearity and contrast ratio due to the output current slew rate control for EMI considerations and the propagation delay time from the PWM rising edge to the output activity.

The PWM pin is a high impedance input. If the PWM dimming function for any channel is not used, connect its corresponding PWM pin to the VCC pin via a 10kΩ series resistor. If any output channel is unused, tie its corresponding PWM pin to ground to disable it and connect it's corresponding INx/OUTx/SHUNTx pins to the VCC pin.

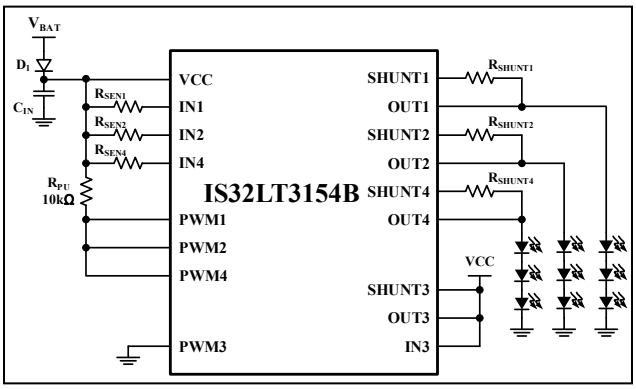

Figure 39 Example of No PWM dimming and Third Channel Unused

DEVICE ENABLE AND SHUTDOWN

The device doesn't have a dedicated enable pin however, pull all PWMx pins below V_{IL_PWM} to turn off all channels. Keep the PWMx pins low for longer than t_{SD} to force the device into shutdown mode with a low standby current. When any PWMx pin is pulled high (>V_{IH_PWM}), the device will be enabled.

VCC UNDERVOLTAGE-LOCKOUT (UVLO)

The IS32LT3154B includes a Power-On Reset (POR) function designed to prevent indeterminate operation at low input voltages. The POR threshold is an internally fixed value and cannot be adjusted. The device becomes operational when the V_{CC} voltage exceeds V_{POR_R} and enters a reset state when the V_{CC} voltage drops below V_{POR_F}.

In addition to this internal fixed POR threshold, there may be applications where setting an external higher VCC UVLO threshold is preferred. This can be achieved by configuring a precise UVLO threshold voltage using a resistor voltage divider between VCC and GND, with the center point connected to the PWMx pin.

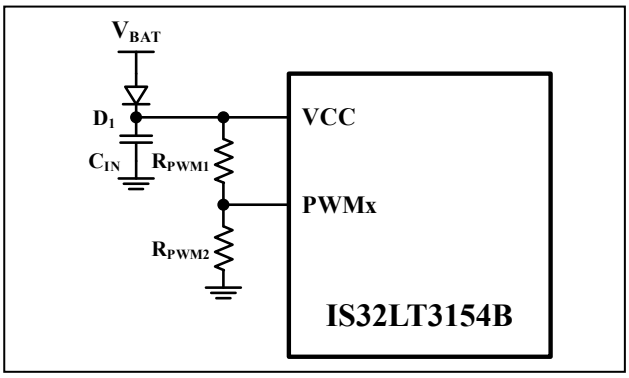

Figure 40 External VCC UVLO Defined by PWMx Pins

The external VCC UVLO threshold voltage can be calculated using the following equations:

$$V_{UVLO_EXF} = V_{IL_PWM} \times \frac{R_{PWM1}+R_{PWM2}}{R_{PWM2}} \quad (3)$$

$$V_{UVLO_EXR} = V_{IH_PWM} \times \frac{R_{PWM1}+R_{PWM2}}{R_{PWM2}} \quad (4)$$

The corresponding output channel is enabled when the V_{CC} voltage exceeds V_{UVLO_EXR} and disabled when the V_{CC} voltage falls below V_{UVLO_EXF}.

For precise detection, it is recommended that R_{PWM1} and R_{PWM2} be 1% resistors with good temperature characteristics. The resistor divider should be placed as close to the corresponding PWM pin as possible to prevent noise coupling into the UVLO detection circuit.

POWER SUPPLY MODULATION (PSM) DIMMING

Besides PWM dimming, the IS32LT3154B also supports Power Supply Modulation (PSM), which enables LED dimming by pulse width modulating the power supply rail while maintaining the stability of the IS32LT3154B's current regulation loop. In PSM dimming scenarios, it's recommended to use the external VCC UVLO defined by PWMx pins. The V_{UVLO_EXR} threshold voltage should be set to be higher than the LED string forward voltage plus sufficient headroom voltage.

When the voltage applied to the VCC pin exceeds the V_{UVLO_EXR} threshold voltage, the output current is turned on and is well regulated. However, if the voltage applied to the VCC pin is lower than the V_{UVLO_EXF} threshold voltage, the output current is turned off. By varying the duty cycle of the power supply voltage at a fixed frequency (above 100Hz), the LED brightness can be adjusted using the following equation:

$$I_{LEDx_PSM} = I_{LEDx} \times D_{PSM} \quad (5)$$

Where D_{PSM} is the duty cycle of the PSM signal.

For better dimming linearity, it's recommended to use a PSM frequency in the range of 100Hz to 300Hz (typically 200Hz), and the input capacitor, C_{IN}, should be a low value (0.1μF Typ.) to ensure rapid discharge during the PSM low period. Lower frequency PSM signals provide better dimming linearity and contrast ratio due to the output current's power-on response time.

THERMAL SHUNT MECHANISM

For any linear constant current LED driver, the power dissipation within the driver is determined by the voltage drop across the driver and the output current passing through it.

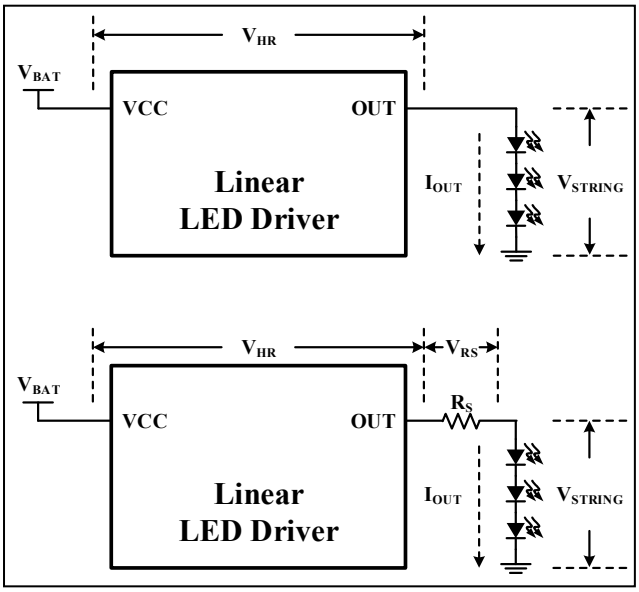

Figure 41 Typical Linear LED Driver Power Dissipation

As in the above figure, the power dissipation on the driver can be calculated by following equation:

$$P_{DRIVER} = V_{HR} \times I_{OUT} = (V_{BAT} - V_{STRING}) \times I_{OUT} \quad (6)$$

According to above equation, a higher input voltage will result in more power dissipation on the driver. A power resistor, R_S, can be added to shunt some power away from the driver. The power dissipation on the driver becomes:

$$P_{DRIVER} = V_{HR} \times I_{OUT} = (V_{BAT} - R_S \times I_{OUT} - V_{STRING}) \times I_{OUT} \quad (7)$$

Since the internal current consumption of the linear LED driver is negligible compared to I_{OUT}, I_{VCC} is essentially equal to I_{OUT}.

A larger R_S value can significantly reduce the power dissipation on the driver, especially for high voltage inputs. However, it is important to consider the automotive battery voltage range (typically 9V to 16V) when selecting the R_S value. Using a large R_S may lead to insufficient operating headroom voltage (V_{HR}) for the driver at low input voltages, resulting in a drop in the output current.

To address this issue, the IS32LT3154B features a thermal shunt mechanism with two current output paths for each channel, OUTx pin and SHUNTx pin. The OUTx pin is directly connected to the LED string, while the SHUNTx pin is connected to the LED string via a thermal shunt resistor, R_{SHUNTx}. This series arrangement allows for part of the power dissipation to be shared and reduces thermal accumulation in the IS32LT3154B. As shown in the below figure.

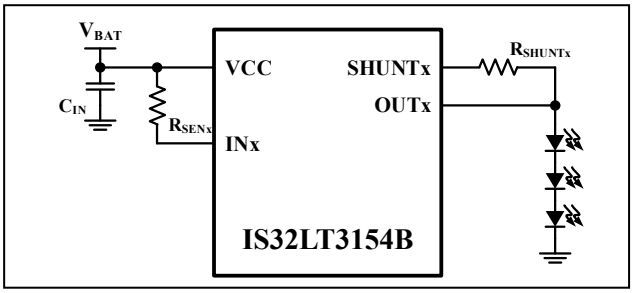

Figure 42 Thermal Shunt Topology

The IS32LT3154B features independent current regulation on both the OUTx and SHUNTx pins to achieve the total required current output for the LED string. Current flows from the supply through the R_{SENx} resistor into the integrated current regulation circuit, and then to the LED string through OUTx pin and SHUNTx pins. The summed current of OUTx and SHUNTx is equal to the current through the R_{SENx} resistor in the channel. The IS32LT3154B dynamically adjusts the output current on both OUTx and SHUNTx pins to maintain a stable summed current for the LED string.

By default, the thermal shunt mechanism directs current through the SHUNTx pin. The device regulates the current output to the SHUNTx pin as much as possible until the SHUNTx current path is saturated. Any remaining current is regulated out the OUTx pin. However, at low V_{BAT} input voltages, the thermal shunt resistor R_{SHUNTx} will limit the current through the SHUNTx path, causing most of the current to flow through the OUTx path. This current diversion to the OUTx path will ensure sufficient headroom operating voltage (V_{HR}) so the driver can maintain a constant output current to the LED string.

As V_{BAT} increases, more output current is gradually diverted from the OUTx path to the SHUNTx path. The resistor R_{SHUNTx} can significantly shunt power from the driver at high input voltages to maintain the driver's junction temperature at an acceptable level.

It's important to note that SHUNTx pins should never be left floating. If the thermal shunt mechanism is not implemented, connect the SHUNTx pin to the corresponding OUTx pin directly.

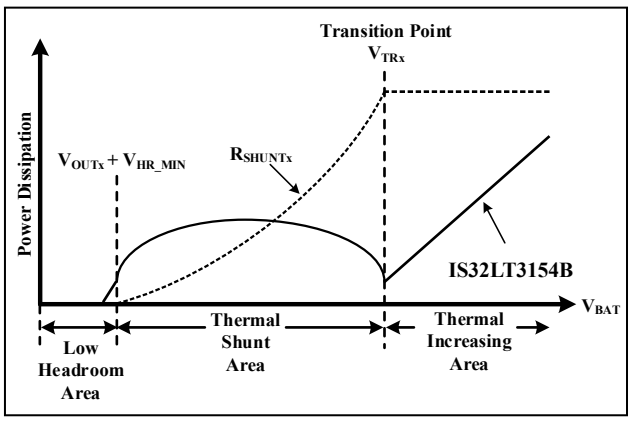

Figure 43 Power Dissipation Distribution

As shown in the above figure, the IS32LT3154B has different operating areas when using the thermal shunt mechanism. Within the Low Headroom Area, the input voltage is too low for current regulation. Even though all output current flows through the OUTx path, the headroom voltage is insufficient to reach the required operating value, resulting in minimal power dissipation. When the input voltage exceeds (V_{OUTx} +V_{HR_MIN}), the transition voltage V_{TRx} divides the operation into two areas: Thermal Shunt Area and Thermal Increasing Area.

Thermal Shunt Area:

The IS32LT3154B's output channels operate in constant regulator mode once the input voltage exceeds (V_{OUTx}+V_{HR_MIN}). The majority of the output current gradually shifts from the OUTx path to the SHUNTx path. Therefore, power dissipation on the R_{SHUNTx} resistor increases while the power dissipation on the driver remains relatively low. The SHUNTx current path can be calculated by:

$$I_{SHUNTx} = \frac{V_{BAT}-V_{OUTx}-V_{SEN}-V_{HR_MIN}}{R_{SHUNTx}} \quad (8)$$

Where, V_{OUTx} is the voltage at the OUTx pin. V_{HR_MIN} is the minimum headroom voltage for the target current. x = 1, 2, 3 or 4 for output channel 1, 2, 3 or 4.

The current through the OUTx path:

$$I_{OUTx} = I_{LEDx} - I_{SHUNTx} \quad (9)$$

Where, I_{LEDx} is the LED current set by the R_{SENx} resistor.

The power dissipation on the R_{SHUNTx} resistor is:

$$P_{SHUNTx} = \frac{(V_{BAT}-V_{OUTx}-V_{SEN}-V_{HR_MIN})^2}{R_{SHUNTx}} \quad (10)$$

The power dissipation on the IS32LT3154B can be calculated as:

$$P_{3154B_TSA} = V_{BAT} \times I_{CC} + \sum_{x=1}^{N}(V_{BAT} \times I_{LEDx} - P_{SHUNTx} - V_{OUTx} \times I_{LEDx}) \quad (11)$$

Where, I_{CC} is the IS32LT3154B's quiescent current. N is the number of channels in use.

Thermal Increasing Area:

When the input voltage is equal to or greater than the Transition Voltage V_{TRx}, nearly all the output current (greater than 95% of I_{LEDx}, assumed to be 100% in below calculation) flows through the SHUNTx path to the LED string. The power dissipation on the R_{SHUNTx} resistor remains constant while the power dissipation on the driver increases linearly. The V_{TRx} voltage point of each channel can be independently adjusted by changing the resistance value of R_{SHUNTx}.

$$V_{TRx} = R_{SHUNTx} \times I_{LEDx} + V_{OUTx} + V_{SEN} + 1V \quad (12)$$

To optimize the power dissipation on the driver, the R_{SHUNTx} value should be chosen to make sure V_{TRx} equals the maximum input voltage, which is typically 16V for 12V automotive systems.

$$R_{SHUNTx_16V} = \frac{16V-V_{OUTx}-V_{SEN}-1V}{I_{LEDx}} \quad (13)$$

Where, R_{SHUNT_16V} is the thermal shunt resistor value to achieve V_{TRx}=16V.

The constant maximum power dissipation on the R_{SHUNTx} resistor can be calculated by:

$$P_{SHUNTx_MAX} = R_{SHUNTx} \times {I_{LEDx}}^2 \quad (14)$$

The power rating of R_{SHUNTx} should be carefully considered. It can either be a single high wattage resistor or multiple smaller wattage resistors in parallel to handle the maximum power dissipation.

The power dissipation on IS32LT3154B is calculated by:

$$P_{3154B_TIA} = V_{BAT} \times I_{CC} + \sum_{x=1}^{N}(V_{BAT} \times I_{LEDx} - P_{SHUNTx_MAX} - V_{OUTx} \times I_{LEDx}) \quad (15)$$

FAULT PROTECTION AND REPORTING

For robust system reliability, the IS32LT3154B integrates detection circuitry to detect various fault conditions and report the occurrence via the FAULTB, which can be monitored by an external host. The fault detections include LED string open/short and thermal shutdown. The FAULTB pin has an internal low current source I_{FLT_PU} pulled up to an internal voltage source V_{FLT_PU} and a strong current sink I_{FLT_PD}, pulled down to ground. As shown in figure below, the FAULTB pin will be strongly pulled low by the internal current sink when a fault condition is detected.

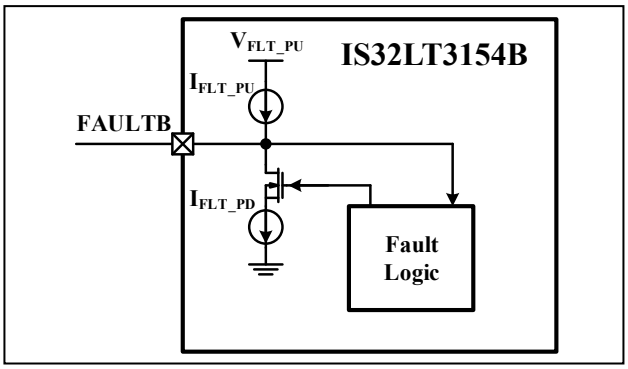

Figure 44 FAULTB Pin Internal Circuit

The FAULTB pin also supports an input function. If the FAULTB pin voltage drops below the input logic low level V_{IL_FLT}, whether due to an external circuit pulling it down or the internal pull-down current sink I_{FLT_PD}, all output channels (except the failing one) will be turned off to satisfy the "one-fail-all-fail" requirement. The device will not resume normal operation until the FAULTB pin voltage rises above the input logic high level V_{IH_FLT}. If the FAULTB pin is externally pulled down, the device enters fault mode and consumes a fault current of I_{FAULT}.

In lighting systems with multiple IS32LT3154Bs that require the complete lighting system to be shut down when a fault is detected, the system FAULTB pins can be connected in parallel. A fault output by one device will pull down the FAULTB pins of the other parallel connected devices, turning them off simultaneously and satisfying the system "one-fail-all-fail" requirement.

Placing an external 200Ω pull up resistor on the FAULTB pin will prevent the internal pull-down current sink I_{FLT_PD} from pulling down the FAULTB pin below V_{IL_FLT}; this will ensure the fault actions will keep other channels in normal operation to satisfy the "one-fail-other-on" requirement. Refer to Table 1 for detailed fault actions.

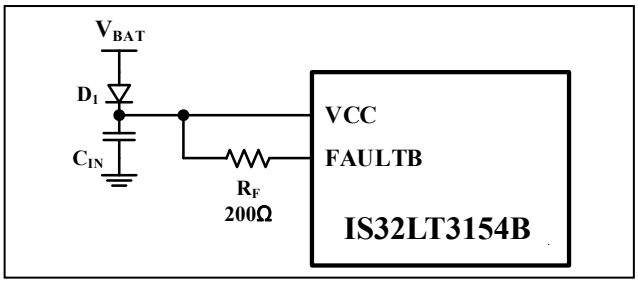

Figure 45 Externally Forced FAULTB High Without Reporting

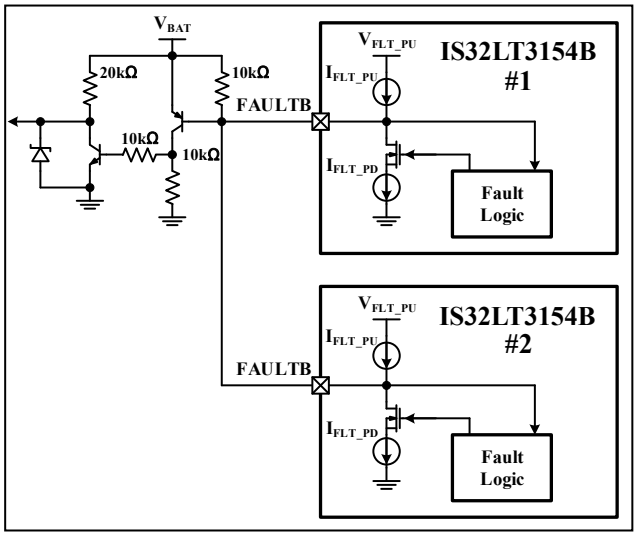

Figure 46 Externally Forced FAULTB High With Reporting

LED STRING OPEN PROTECTION ENABLE

The IS32LT3154B includes a UV pin with an accurate threshold that can disable the LED string open detection function. The detection is enabled when the UV pin voltage is above its rising threshold, V_{IH_UV}, and disabled when it is below its falling threshold, V_{IL_UV}. A proper resistor divider (R_{UV1} and R_{UV2}) connected from the VCC pin to the UV pin can set a UVLO function. This configuration prevents insufficient V_{CC} from falsely triggering the LED string open detection function. The UVLO voltage threshold is determined by the resistor divider.

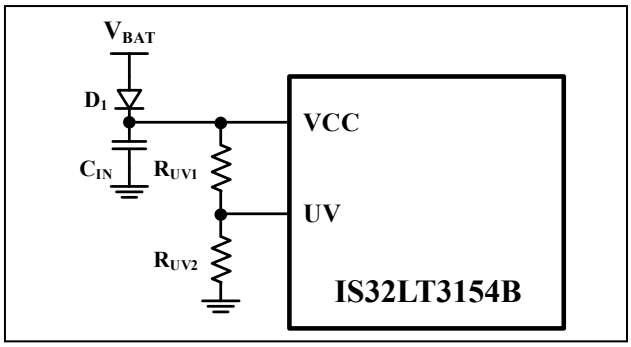

Figure 47 UVLO for LED String Open Protection

$$V_{UVLO_FLTF} = V_{IL_UV} \times \frac{R_{UV1}+R_{UV2}}{R_{UV2}} \quad (16)$$

$$V_{UVLO_FLTR} = V_{IH_UV} \times \frac{R_{UV1}+R_{UV2}}{R_{UV2}} \quad (17)$$

It is recommended to set V_{UVLO_FLTF} at least 0.5V higher than the LED string forward voltage. Select resistors R_{UV1} and R_{UV2} with 1% accuracy and good temperature characteristics to ensure stable and precise detection. Place the resistor divider as close to the UV pin as possible on the PCB layout to minimize noise interference. If the UV pin is unused, connect it to the VCC pin using a 10kΩ resistor.

Only LED string open detection can be disabled by pulling down the UV pin. The LED string short and thermal shutdown detection cannot be turned off by pulling down the UV pin.

LED STRING OPEN PROTECTION

The LED string open detection monitors the output voltage when the current output is enabled. If any LED string is open, the corresponding OUTx pin will be pulled up close to the INx pin voltage by the current source. If V_{CC}>V_{UVLO_FLTR} and PWMx is high, and if the voltage drops between the INx pin and OUT_X pin, (V_{INx}-V_{OUTx}), falls below the open LED detect voltage threshold, V_{OCD_R}, and this condition persists for longer than the deglitch time t_{OS_DEG}, the LED string open detection will be triggered, causing the FAULTB pin to go low, indicating a fault condition. The channel with the open LED string condition will reserve a small current (I_{RTR_OUT} through OUTx pin and I_{RTR_SHUNT} through SHUNTx pin) for recovery detection, ignoring the PWM input. The other channels will be turned off due to the FAULTB pin being low, which satisfies the "one-fail-all-fail" condition. If the FAULTB pin is externally forced high (for example, pulled up by a 200Ω resistor to VCC), the other channels will remain turned on, which satisfies the "one fail other on" condition.

The IS32LT3154B will return to normal operation and FAULTB pin will go high once the LED string open condition is resolved, with (V_{INx}-V_{OUTx}) rising above the open LED detect voltage threshold, V_{OCD_F}.

LED STRING SHORT PROTECTION

The LED string short detection function monitors the output voltage when the current output is enabled. The LED string short condition is detected if either one of the OUTx or SHUNTx pin voltage drops below the short detect voltage threshold, V_{SCD_F}. Once a short condition occurs and persists for longer than the deglitch time t_{OS_DEG}, the LED string short detection function will be triggered and the FAULTB pin will go low to indicate a fault condition. The shorted channel will reserve a small current (I_{RTR_OUT} through OUTx pin and I_{RTR_SHUNT} through SHUNTx pin) for recovery detection, ignoring the PWM input. The other channels will be turned off due to the FAULTB pin low, that satisfies "one-fail-all-fail". If the FAULTB pin is externally forced high (for example, pulled up by a 200Ω resistor to VCC), the other channels will remain turned on that satisfies the "one-fail-other-on" condition.

The device will resume normal operation and FAULTB pin will return to a high state once the short condition is removed, both OUTx pin and SHUNTx pin voltage rising above the short detect voltage threshold, V_{SCD_R}.

THERMAL SHUTDOWN

In the event the device junction temperature exceeds T_{SD} (Typ. 175˚C), all output channels will go to the "OFF" state and FAULTB pin will be pulled low to report the fault condition. At this point, the IS32LT3154B will begin to cool off. Any attempt to enable the channels back to the source condition before the IC has cooled below (T_{SD}-T_{SDHY}) (Typ. 155˚C) will be blocked and the IC will not be allowed to restart. The device returns to normal operation and the FAULTB pin goes back to a high state once the IS32LT3154B has cooled down.

Table 1 Fault Actions Table

UV pin	FAULTB Status	Fault Type	Fault Condition	PWM Input	Deglitch Time	FAULTB Action	Output State	Recovery
$>V_{IH_UV}$	High	LED string open	$(V_{INx}$-$V_{OUTx})$ $<V_{OCD_R}$	PWMx = H	t_{OS_DEG}	Constant current pulldown	Faulty channel outputs I_{RTR} for recovery detection, Ignores the PWM input	$(V_{INx}$-$V_{OUTx})$ $>V_{OCD_F}$
		LED string short	$V_{OUTx}<V_{SCD_F}$ or $V_{SHUNTx}<V_{SCD_F}$	PWMx = H	t_{OS_DEG}	Constant current pulldown	Faulty channel outputs I_{RTR} for recovery detection, Ignores the PWM input	$V_{OUTx}>V_{SCD_R}$ or $V_{SHUNTx}>V_{SCD_R}$
		Thermal shutdown	$T_J>T_{SD}$	PWMx = H	-	Constant current pulldown	All channels off	$T_J<(T_{SD}$-$T_{SDHY})$
$<V_{IL_UV}$	High	LED string open	Ignored					
		LED string short	$V_{OUTx}<V_{SCD_F}$ or $V_{SHUNTx}<V_{SCD_F}$	PWMx = H	t_{OS_DEG}	Constant current pulldown	Faulty channel outputs I_{RTR} for recovery detection, Ignores the PWM input	$V_{OUTx}>V_{SCD_R}$ or $V_{SHUNTx}>V_{SCD_R}$
		Thermal shutdown	$T_J>T_{SD}$	PWMx = H	-	Constant current pulldown	All channels off	$T_J<(T_{SD}$-$T_{SDHY})$
Not care	Low	Fault detected	Device turns all remained channels off and keeps retrying on the failed channels. After the FAULTB pin is released, all channels are turned on after t_{FLT_DEL} time.					
		No Fault detected	Device turns all channels off.					

THERMAL CONSIDERATIONS

The package thermal resistance, θ_{JA}, determines the amount of heat that can pass from the silicon die to the surrounding ambient environment. The θ_{JA} is a measure of the temperature rise created by power dissipation and is usually measured in degree Celsius per watt (°C/W). The junction temperature, T_J, can be calculated by the rise of the silicon temperature, ΔT, the power dissipation on IS32LT3154B, P_{3154B}, and the package thermal resistance, θ_{JA}, as in following equation:

$$T_J = T_A + \Delta T = T_A + P_{3154B} \times \theta_{JA} \qquad (18)$$

The P_{3154B} is described in the "THERMAL SHUNT MECHANISM" section.

When operating the chip at high ambient temperatures, or when the supply voltage is high, care must be taken to avoid exceeding the package power dissipation limits. The maximum power

dissipation at T_A=25˚C can be calculated using the following equation:

$$P_{D(MAX)} = \frac{150°C-25°C}{\theta_{JA}} \quad (19)$$

So,

$$P_{D(MAX)} = \frac{150°C - 25°C}{32.2°C/W} \approx 3.88W$$

for eTSSOP-20 package.

Below figure shows the power derating of the IS32LT3154B on a JEDEC board (in accordance with JESD 51-5 and JESD 51-7) standing in still air.

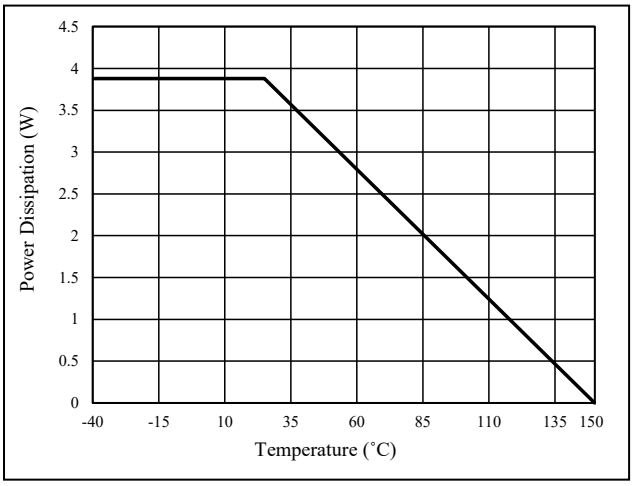

Figure 48 Dissipation Curve

The R_{SHUNTx} will experience significant power dissipation during a thermal shunt function, so the selected resistor package power rating should be adequate to prevent thermal runaway.

When designing the Printed Circuit Board (PCB) layout, use a double-sided PCB with a large copper area on each side of the board directly under the IS32LT3154B and the thermal shunt resistor. Multiple thermal vias, as shown in following figure, will help to conduct heat away from the exposed pad of the IS32LT3154B and the thermal shunt resistor to the copper on each side of the board. The thermal shunt resistor can be composed of multiple parallel connected resistors spread out on the PCB board and placed at a distance from IS32LT3154B, so they don't contribute to the IS32LT3154B's thermal buildup.

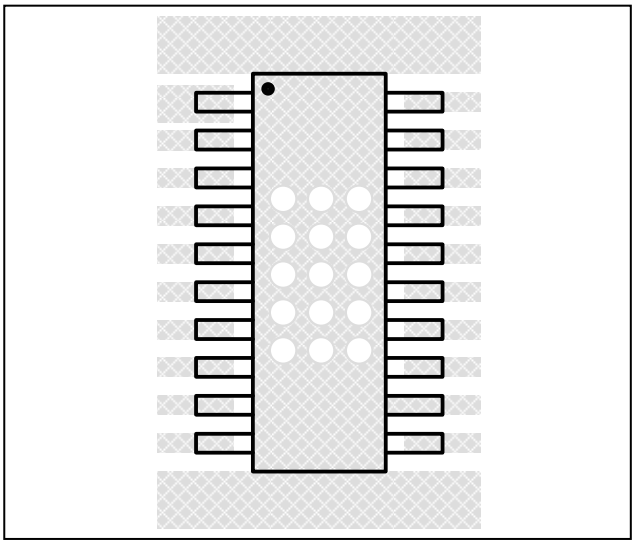

Figure 49 Board Via Layout For Thermal Dissipation

CLASSIFICATION REFLOW PROFILES

Profile Feature	Pb-Free Assembly
Preheat & Soak Temperature min (Tsmin) Temperature max (Tsmax) Time (Tsmin to Tsmax) (ts)	150°C 200°C 60-120 seconds
Average ramp-up rate (Tsmax to Tp)	3°C/second max.
Liquidous temperature (TL) Time at liquidous (tL)	217°C 60-150 seconds
Peak package body temperature (Tp)*	Max 260°C
Time (tp)** within 5°C of the specified classification temperature (Tc)	Max 30 seconds
Average ramp-down rate (Tp to Tsmax)	6°C/second max.
Time 25°C to peak temperature	8 minutes max.

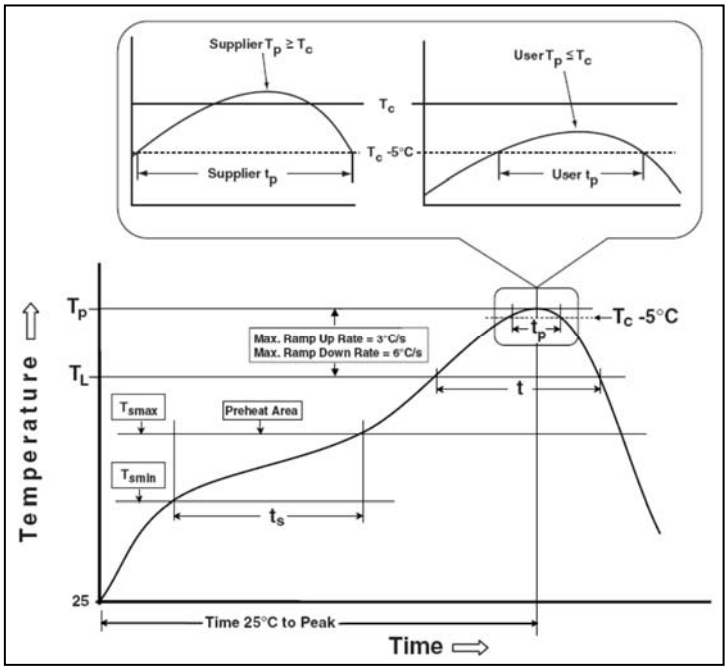

Figure 50 Classification Profile

PACKAGE INFORMATION

eTSSOP-20

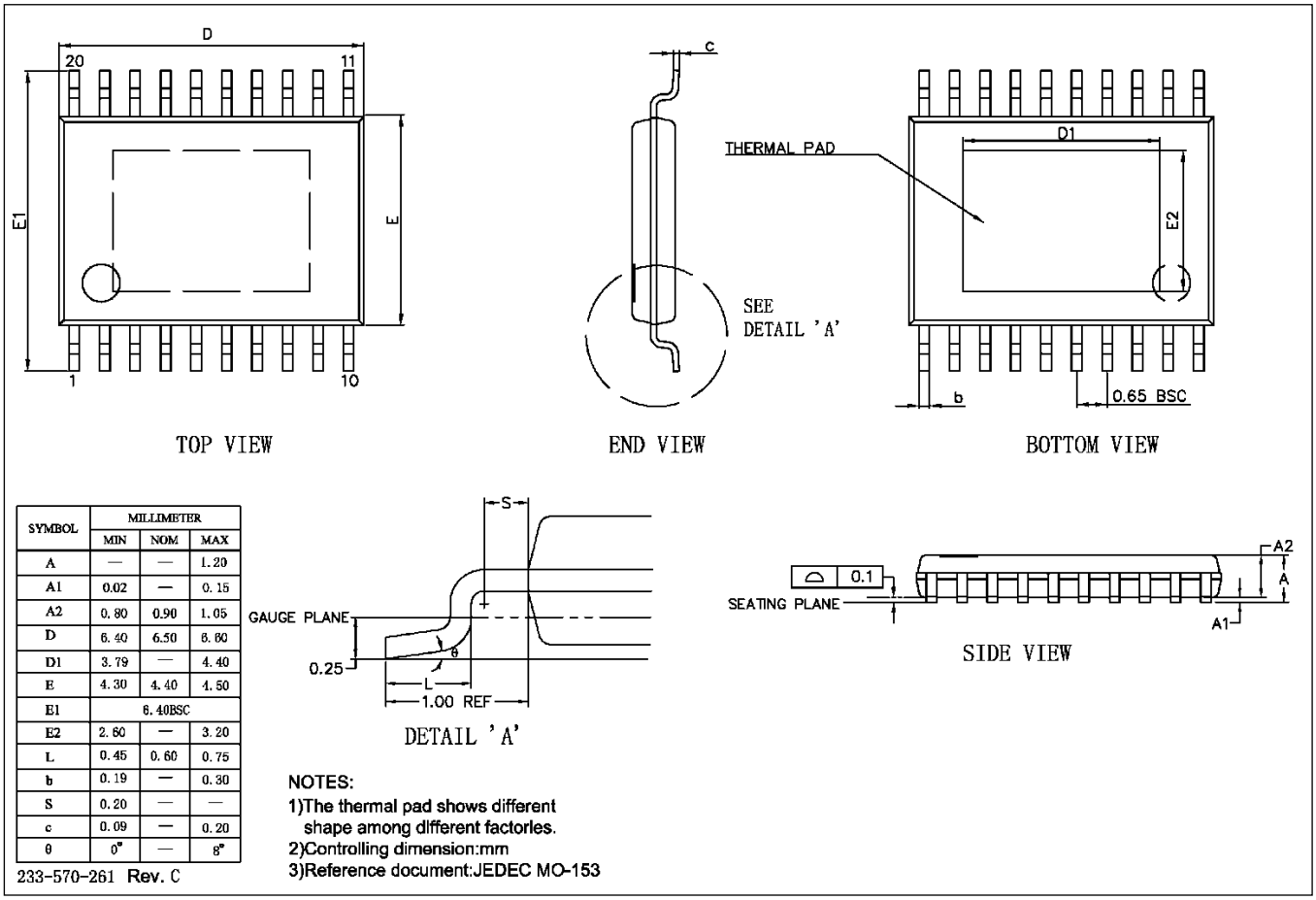

SYMBOL	MILLIMETER		
	MIN	NOM	MAX
A	—	—	1.20
A1	0.02	—	0.15
A2	0.80	0.90	1.05
D	6.40	6.50	6.60
D1	3.79	—	4.40
E	4.30	4.40	4.50
E1	6.40BSC		
E2	2.60	—	3.20
L	0.45	0.60	0.75
b	0.19	—	0.30
S	0.20	—	—
c	0.09	—	0.20
θ	0°	—	8°

233-570-261 Rev. C

NOTES:
1)The thermal pad shows different shape among different factorles.
2)Controlling dimension:mm
3)Reference document:JEDEC MO-153

RECOMMENDED LAND PATTERN

eTSSOP-20

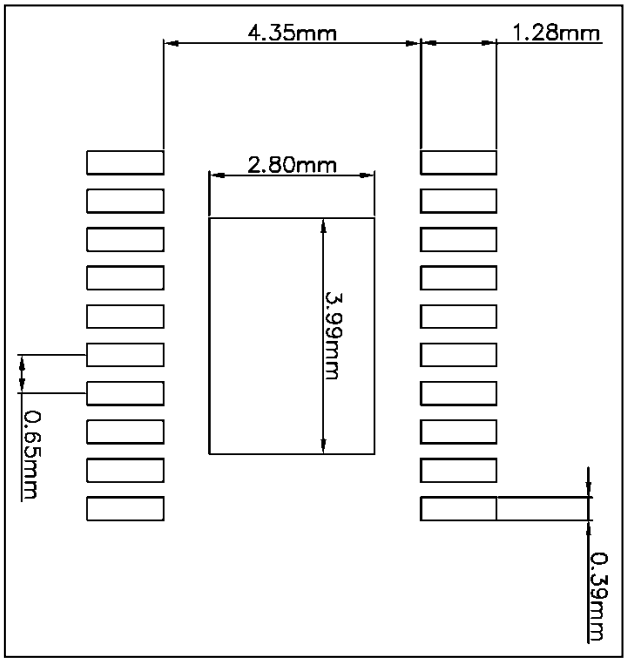

Note:

1. Land pattern complies to IPC-7351.
2. All dimensions in MM.
3. This document (including dimensions, notes & specs) is a recommendation based on typical circuit board manufacturing parameters. Since land pattern design depends on many factors unknown (eg. user's board manufacturing specs), user must determine suitability for use.

REVISION HISTORY

Revision	Detail Information	Date
0A	Initial release	2025.04.22
A	Update EC table and add PERFORMANCE CHARACTERISTICS	2026.02.10